~ Satellite Reception ~
Doppler shift tuning with a push buttons RX and *Instant*Tune

ON6WG / F5VIF

Introduction

When using directional antennas, a satellite tracking controller is needed to make antenna pointing completely automatic. It is also used to tune the transceiver for Doppler shift. This system is not necessary when omnidirectional antennas are used.
However, because of the Doppler shift effect, it is still necessary to tune the receiver during the pass. To replace the controller I decided to use a laptop and *Instant*Tune, a software written by AA2TX. *Instant*Tune calculates the up link and down link Doppler shifts and fine-tunes both the receiver and the transmitter to compensate.
*Instant*Tune uses ordinary PC serial or parallel ports making it ideal for the use with a laptop computer. Besides, *Instant*Tune is a DOS TSR* (* see explanation below in "*Instant*Tune and Windows XP" section) program and it only works if InstantTrack is installed on the computer (despite it is a DOS program, *Instant*Track is probably one of the best satellite tracking software).
The possibilities of *Instant*Tune are so broad that it can be used with many different receivers, transmitters, transceivers, and particularly devices equipped with up/down push buttons. *Instant*Tune has another very important possibility: the default frequency step can be changed to anything your radio will support.
To make the connection between the computer and the radio a small interface is needed. The interface proposed by AA2TX is very simple and does not need a power supply.
The UHF transceiver I use to receive mode J satellites is a Kenwood TR-9500.
But simple things are sometimes complicated...

'AA2TX' interface

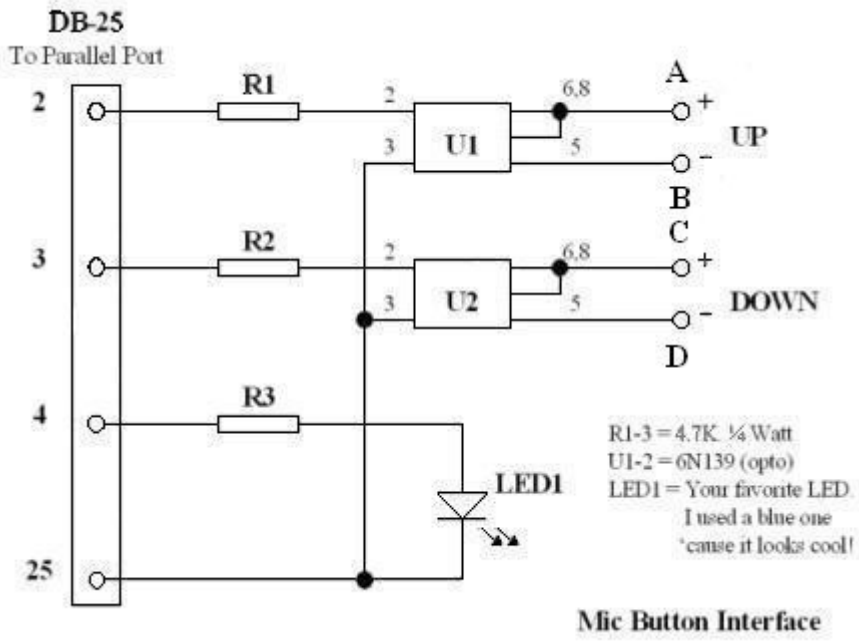

The interface proposed by AA2TX (Fig.1) uses two opto-couplers. It does not need a power supply and both devices are fully isolated from each other. In this design the opto-coupler requires a potential difference of at least 1V to the terminals of the push button to work correctly. If this voltage is below 1V the opto-coupler does not work. This is just the case on the TR-9500 (the voltage measured across the microphone buttons with the switches open is 0.643V).
To solve this problem I designed an additional part **that makes it a universal interface for any push buttons radios**.
This interface is simply acting like a switch connected in parallel on the push button.

'ON6WG' additional interface

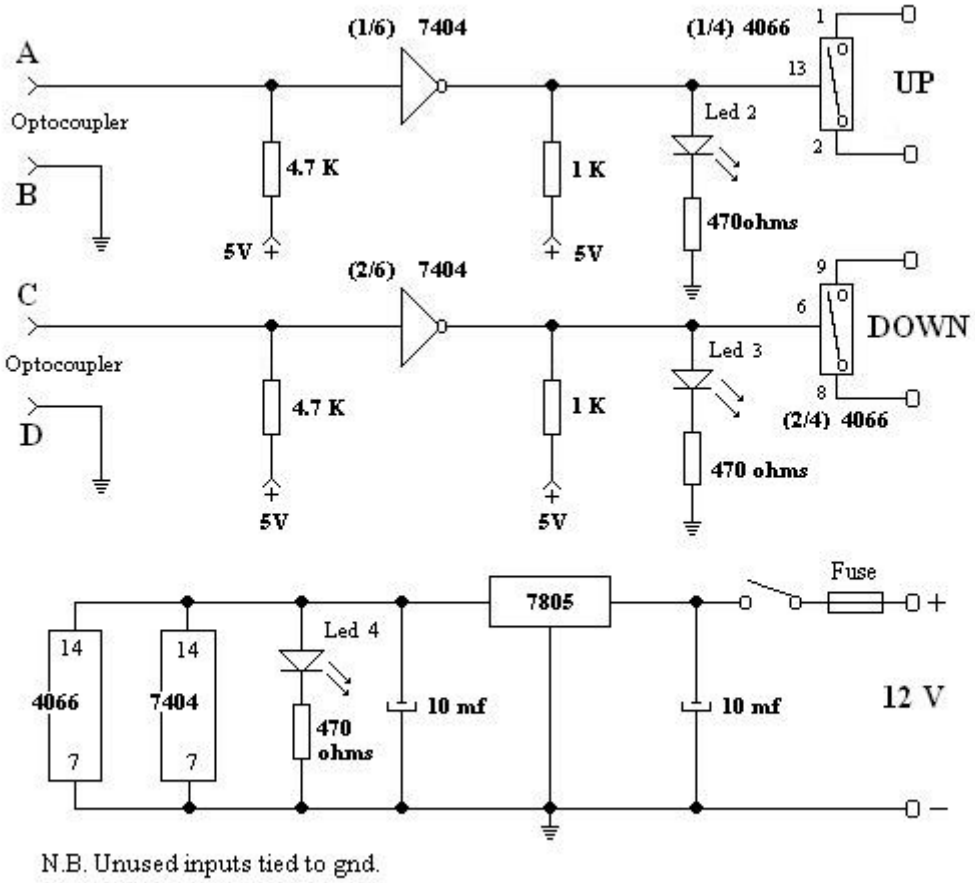

Schematic

Three different technologies are used in these schematics (opto-coupler, TTL, CMOS). This is why 'pull-up' resistors are used at the entrance and at the exit of the inverter (7404). LEDs provide a visual indication of pulses sent to the radio. LED 1 : this 5mm in diameter blue LED lights up when the tuning is completed ('Tuning complete' on the front panel). LED 2 : (5 mm diameter) is red in color because when the frequency increases the satellite is not approaching the station. LED 3 : (5mm diam) is yellow in color because when the frequency decreases the satellite is approaching. LED 4 : (3mm diam blue) is the on/off indicator. Unused inputs must be tied to ground to avoid noise problems or gate outputs to oscillate.

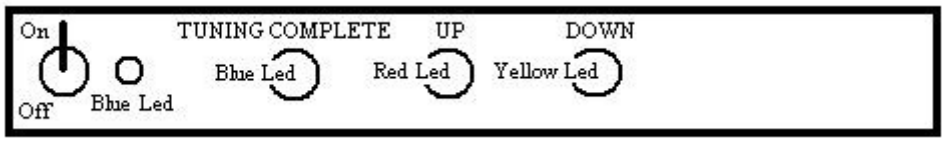

When the computer and the radio are connected together through this interface, they are completely electrically isolated from each other.

InstantTune and Windows XP

As stated above *Instant*Tune is a 'TSR' computer program. TSR is the abbreviation for "**T**erminate and **S**tay **R**esident". This type of program supports background operation allowing you to exit from one program and run another one while the 'TSR' program is still continuing to do its task.
*Instant*Tune and *Instant*Track are programs for PC running DOS or environment for DOS programs like Windows. *Instant*Tune can work under any operating system from DOS-5 up to and including Win2000.
My main computer is working under 'Windows XP' and I was curious to see if *Instant*Tune and *Instant*Track would work on this computer.
Installing the two software was easy but after a few tests it was obvious that the information transmitted by the computer to the LPT port was not correct.
After contacting AA2TX it appeared that under Win XP, *Instant*Tune is not able to send reliable information to the parallel LPT port. Consequently a previous version of 'Windows' must be used to connect push button radios through the interface described above.
"*Instant*Tune V1.50F" (the most recent version) is working correctly under Win XP and serial port only (pse read the "itune.doc" file to have more information about the use of serial port).

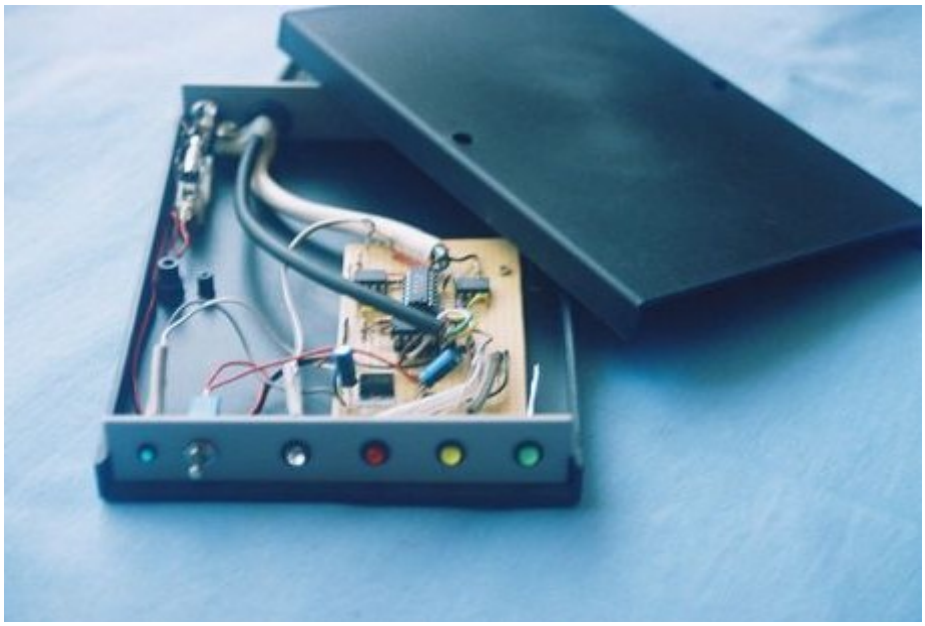

~ Box and interface ~

The green LED

On the above picture, a green LED has been added to the right of the front panel. It is a AOS-LOS visual indicator. A driver (TSR) created at my request by AA2TX was added to '*Instant*Track'. It sends a signal through LPT port (pin 5) to turn on the LED when the satellite goes above 0.5 degrees. If the satellite goes below 0.5 degrees it will shut the led off. This signal can be used also to switch on any device when the satellite appears and to switch off this device when it disappears. For this purpose one more channel should be added to the interface.
In case we want to use only a LED to show the actual pass of the satellite, the green LED will be connected between pin 25 and pin 5 of the LPT port through a 1 K resistor. This TSR driver can be obtained by sending me an e-mail.

Update (January 2011)

With the evolution of technology, the interface presented above is now obsolete as there is a new alternative solution to replace the opto-couplers. Of course we can still build it because this interface uses very common and cheap components. It allows also to visualize the pulses at the output of the parallel port.
However the schematic below will replace advantageously the two previous schematics. It is based on the schematic of the original interface proposed by AA2TX. The opto-couplers (6N139) are replaced by PhotoMOS relays (Panasonic type AQW210EH or Vishay LH1522AB).

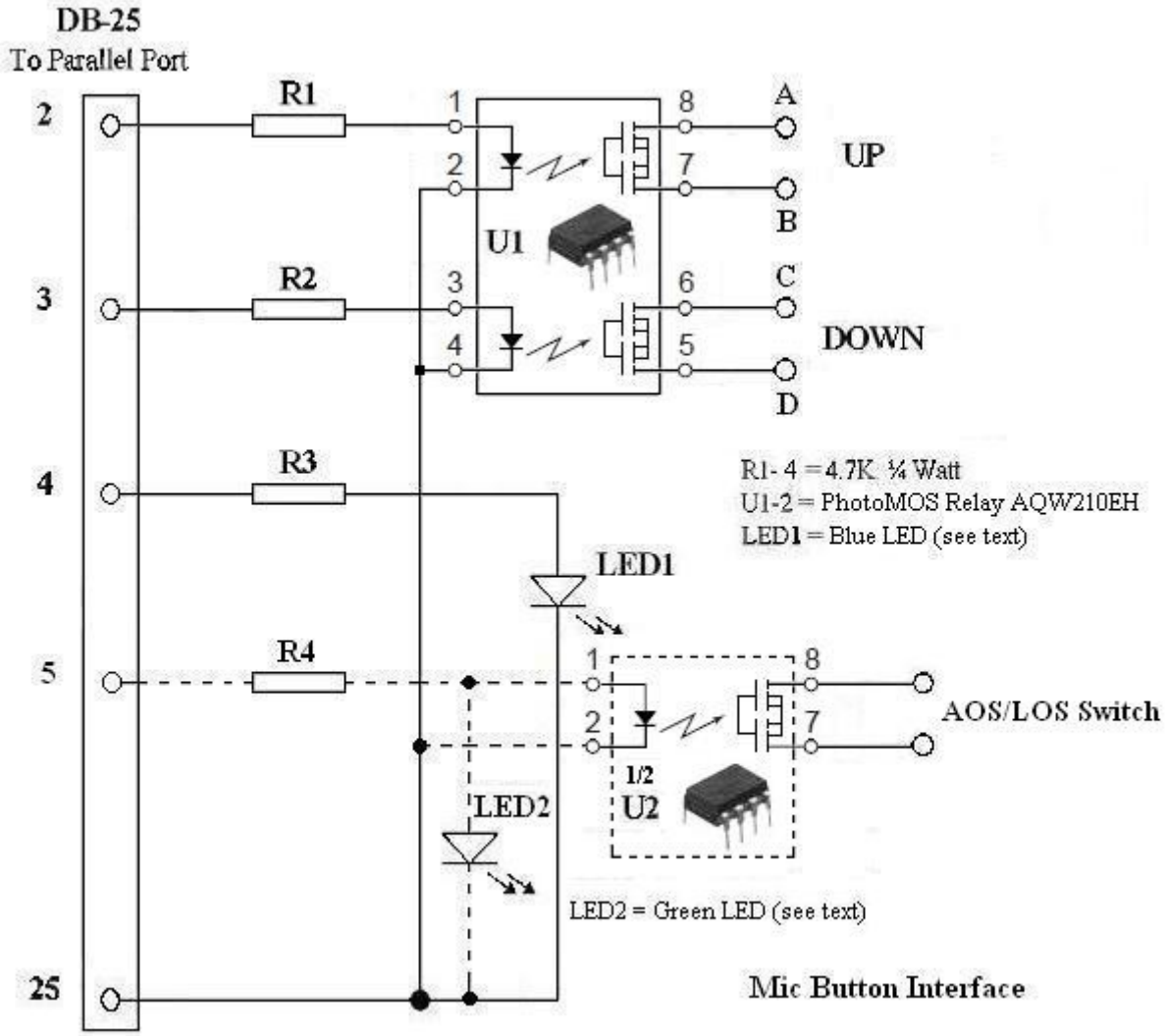

The resistors are identical to the resistors used in the original schematic. An external power supply is not needed. The optional additional channel (DB-25 connector / pin 5, see text about the green LED) is shown in dotted lines. Since the power consumption on the parallel port must remain very low it is not recommended to add a LED to visualize the pulses on the lines connected to the PhotoMOS relays U1 and possibly U2. Only the blue LED1 (pin 4) may be installed and possibly the green LED (LED2) if U2 is not added. The PhotoMOS relays AQW210EH can be purchased from Mouser Electronics,Inc.(Mouser Ref. 769-AQW210EH), heading "Panasonic Solid State Relays".
To order the PhotoMOS relays, click on the link below and first choose your country :

http://www2.mouser.com/localsites/

More details about the PhotoMOS relays ? click here

Conclusion

This simple interface connected to a computer with '*Instant*Tune' installed on it will give a new life to your up/down push button radio. This radio will be turned into a real satellite tracking receiver (or transceiver as the case may be).

~ Interface operation at the radio station F5VIF ~

Video showing the system in operation tracking the signal sent by a satellite

Click on the link hereafter : http://pagesperso-orange.fr/on6wg/Page 4.html (added July 19.2010)

Bibliography

" InstantTune User's Guide " AA2TX (a *PDF version is posted "here")

" The ARRL Data Book " published by the "American Radio Relay League"

Technical Data " www.alldatasheet.com "

Aknowledgements

To Anthony Monteiro AA2TX for his help in this project.

ON6WG / F5VIF Web site : …..... http://pagesperso-orange.fr/on6wg

ON6WG / F5VIF e-mail address : …..... f5vif@amsat.org

ON6WG/F5VIF PDF File Use Policy
PDF files may be copied or distributed for any non commercial use without prior permission. If a part of the document (text, image, picture, schematic) is used separately, the user agrees to indicate the source of it. A URL must be provided, either to the home page of the ON6WG/F5VIF website or to the page providing the link to the part of the document. The user agrees also to use a credit line in connection with the part of the document, unless the part of the document already contains this information. The credit line should be "Courtesy ON6WG/F5VIF".
Read also the "Terms of Use for the ON6WG/F5VIF Website".